ENTERPRISE ALBUM

SOLAR POWER

Solar Hybrid Inverter LiFePO4
Lithium Battery Solar Power System

SOLAR POWER

>2025

ENTERPRISE ALBUM

Solar Hybrid Inverter LiFePO4
Lithium Battery Solar Power System

SOLAR POWER

MPPT Solar Inverter

VOLTRONIC BOARD

Features:

1.Pure sine wave solar inverter
2.MPPT power increases to 3kw for 2.5k model
3.Charging current increases to 80A
4.Wide PV input voltage range and personal computers
5.Configurable AC/Solar input priority via LCD setting
6.Compatible to mains voltage or generator power
7.Smart battery charger design for optimized battery performance
8.Cold start function
9.Works with or without battery
10.Optional WIFI and BMS function for 1.5K and 3K
11.Feed-in grid function for 1.5K and 3K

SOLAR POWER

Product specifications

Medel	E-PLUS-1500W	E-PLUS-3200W
Rated Power	1500VA/1500W	3200VA/3200W
INPUT		
Voltage	230 VAC	
Selectable Voltage Range	170-280VAC(For Personal Computers);90-280VAC (For Home Appliances)	
Frequency Range	50 Hz/60 Hz(Autosensing)	
OUTPUT		
AC Voltage	230VAC±5%	
Surge Power	3000VA	6200VA
Efficiency(Peak)	90%～93%	
Transfer Time	10 ms(For Personal Computers);20 ms(For Home Appliances)	
Wavefcrm	Pure sine wave	
BATTERY		
Battery Voltage	12VDC	24VDC
Foating Charge Voltage	13.5VDC	27VDC
Overcharge Protection	16 VDC	30VDC
SOLAR CHARGER&AC CHARGER		
Solar Charger Type	MPPT SOLAR INVERTER	
Maximum PV Array Open	350VDC	450VDC
Maximum PV Array Power	2200W	3200W
MPP Range @Operating	60-300VDC	60-400VDC
Maximum Solar Charge	80A	
Maximum AC Charge	80A	
Maximum Charge Current	80A	
PHYSICAL		
Dirension,DxWxH(mm)	90×288×357	100×288×390
Net Weight (kgs)	6.5	7.5
Communication Interface	RS232	
ENVIRONMENT		
Humidity	5%to 95%Relative Humidity(Non-condensing)	
Operating Temperature	-10℃ to 50℃	
Storage Temperature	-15℃ to 60℃	

SOLAR POWER

MPPT Solar Inverter

VOLTRONIC BOARD

Features:

1.Pure sine wave solar inverter
2.Output power factor 1.0
3.Wifi & GPRS available for IOS and android
4.Built-in 80A MPPT solar charger
5.High PV input voltage range (30-400VDC)
6.Built-in anti-dusk kit for harsh environment
7.Smart battery charge design to optimize battery life
8.Meet the rich customize needs of customerse
9.Compatibe with lithium battery
10.Solar energy is provided directly to the load first

SOLAR POWER

Product specifications

model	HY1512M
Rated Power	1500VA/1500W
AC INTPUT	
Voltage	230 VAC
Select-able Voltage Range	170-280VAC (For Personal Computers) 90-280VAC (For Home Appliances)
Frequency Range	50 Hz/60 Hz (Auto sensing)
AC OUTPUT	
AC Voltage Regulation (Batt. Mode)	230 VAC ± 5%
Surge Power	3000VA
Efficiency (Peak)PV to INV	98%
Efficiency (Peak)Battery to INV	94%
Waveform	Pure sine wave
Transfer Time	10ms(For Personal Computers), 20ms(For Home Appliances)
BATTERY 8 AC CHARGER	
Battery Voltage	12 VDC
Floating Charge Voltage	13.5VDC
Overcharge Protection	16VDC
Maximum AC Charge Current	60A
MPPT Solar Inverter	
Maximum PV Array Power	2200W
MPPT Range @ Operating Voltage	30-400VDC
Maximum PV Array Open Circuit Voltage	450VDC
Maximum Charging Current	80A
PHYSICAL	
Dimension, D x W x H (mm)	348 x 270 x 95
Net Weight (kgs)	4
Communication Interface	RS232/GPRS/WIFI
OPERATING ENVIRONMENT	
Humidity	5% to 95% Relative Humidity (Non-condensing)
Operating Temperature	-10°C to 50°C
Storage Temperature	-15°C to 60°C

SOLAR POWER

MPPT Solar Inverter

VOLTRONIC BOARD

Features:

1.Pure sine wave solar inverter
2.Output power factor 1.0
3.Wifi & GPRS available for IOS and android
4.Built-in 80A MPPT solar charger
5.High PV input voltage range (30-400VDC)
6.Built-in anti-dusk kit for harsh environment
7.Smart battery charge design to optimize battery life
8.Meet the rich customize needs of customerse
9.Compatibe with lithium battery
10.Solar energy is provided directly to the load first

SOLAR POWER

Product specifications

model	HY3022MN-L
Rated Power	3000VA/3000W
AC INTPUT	
Voltage	230 VAC
Select-able Voltage Range	170-280VAC (For Personal Computers) 90-280VAC (For Home Appliances)
Frequency Range	50 Hz/60 Hz (Auto sensing)
AC OUTPUT	
AC Voltage Regulation (Batt. Mode)	230 VAC ± 5%
Surge Power	6400VA
Efficiency (Peak)PV to INV	98%
Efficiency (Peak)Battery to INV	94%
Waveform	Pure sine wave
Transfer Time	10ms(For Personal Computers), 20ms(For Home Appliances)
BATTERY 8 AC CHARGER	
Battery Voltage	24 VDC
Floating Charge Voltage	27 VDC
Overcharge Protection	33 VDC
Maximum AC Charge Current	60A
MPPT SOLAR CHARGER	
Maximum PV Array Power	3200W
MPPT Range @ Operating Voltage	30-400VDC
Maximum PV Array Open Circuit Voltage	450VDC
Maximum Charging Current	80A
PHYSICAL	
Dimension, D x W x H (mm)	348 x 270 x 95
Net Weight (kgs)	5
Communication Interface	RS232/GPRS/WIFI
OPERATING ENVIRONMENT	
Humidity	5% to 95% Relative Humidity (Non-condensing)
Operating Temperature	-10°C to 50°C
Storage Temperature	-15°C to 60°C

SOLAR POWER

MPPT Solar Inverter

VOLTRONIC BOARD

Features:

1.Dual outputs for smart load management
2.Maximum PV input current 27A
3.Wide PV input voltage range 60VDC~450VDC
4.Detachable LCD control module with various communications
5.Integrated WiFi interface with Mobile App
6.Supports USB On-the-Go function
7.Reserved communication port (RS-485, CAN-BUS or RS-232) for BMS
8.Battery equalization extends lifecycle
9.Battery independency
10.User-friendly LCD operation
11.Replaceable fan design

SOLAR POWER

Product specifications

Model	VMIV TWIN 4KW
Rated Power	4200VA/4200W
INPUT	
Voltage	230 VAC
Selectable Voltage Range	170-280VAC (For Personal Computers), 90-280VAC (For Home Appliances)
Frequency	50Hz/60Hz(Auto Sensing)
OUTPUT	
AC Voltage Regulation(Batt.Mode)	230VAC ± 10%
Surge Power	8000VA
Efficiency(Peak)	90%-93%
Transfer Time	10 ms (For Personal Computers) 20 ms (For Home Appliances)
Waveform	Pure sine wave
BATTERY	
Battery Voltage	24 VDC
Floating Charge Voltage	27 VDC
Overcharge Protection	33 VDC
MPPT SOLAR CHARGER	
Solar Charger Type	MPPT
Maximum PV Array Power	5600W
MPP Range @operating Voltage	60~450VDC
Max. PV Array Open Circuit Voltage	500VDC
Max. Solar Charge Current	120A
Max AC Charge Current	100A
Max Charge Current	120A
PHYSICAL	
Dimension, D x W x H(mm)	115 x 300 x 435
Net Weight(kgs)	9kg
Communication Interface	USB/RS232/RS485/WiFi/Dry-contact
OPERATING ENVIRONMENT	
Humidity	5% to 95% Relative Humidty(Non-condensing)
Operating Temperature	-10°C to 50°C
Storage Temperature	-15°C-60°C

SOLAR POWER

MPPT Solar Inverter

VOLTRONIC BOARD

Features:

1.Dual outputs for smart load management
2.Maximum PV input current 27A
3.Wide PV input voltage range 60VDC~450VDC
4.Detachable LCD control module with various communications
5.Integrated WiFi interface with Mobile App
6.Supports USB On-the-Go function
7.Reserved communication port (RS-485, CAN-BUS or RS-232) for BMS
8.Battery equalization extends lifecycle
9.Battery independency
10.User-friendly LCD operation
11.Replaceable fan design

SOLAR POWER

Product specifications

Model	VMIV TWIN 6KW
Rated Power	6200VA/6200W
INPUT	
Voltage	230 VAC
Selectable Voltage Range	170-280VAC (For Personal Computers), 90-280VAC (For Home Appliances)
Frequency	50Hz/60Hz(Auto Sensing)
OUTPUT	
AC Voltage Regulation(Batt.Mode)	230VAC ± 10%
Surge Power	12000VA
Efficiency(Peak)	90%-93%
Transfer Time	10 ms (For Personal Computers) 20 ms (For Home Appliances)
Waveform	Pure sine wave
BATTERY	
Battery Voltage	48 VDC
Floating Charge Voltage	54 VDC
Overcharge Protection	63 VDC
MPPT SOLAR CHARGER	
Solar Charger Type	MPPT
Maximum PV Array Power	7000W
MPP Range @operating Voltage	60~450VDC
Max. PV Array Open Circuit Voltage	500VDC
Max. Solar Charge Current	120A
Max AC Charge Current	100A
Max Charge Current	120A
PHYSICAL	
Dimension, D x W x H(mm)	115 x 300 x 435
Net Weight(kgs)	10kg
Communication Interface	USB/RS232/RS485/WiFi/Dry-contact
OPERATING ENVIRONMENT	
Humidity	5% to 95% Relative Humidty(Non-condensing)
Operating Temperature	-10°C to 50°C
Storage Temperature	-15°C-60°C

SOLAR POWER

MPPT Solar Inverter

VOLTRONIC BOARD

Features:

1.Maximum PVinput current 27A
2.Dual outputs for smart load management
3.Touchable button with 4.3" colored LCD
4.Built-in WiFi for mobile monitoring (APP is available)
5.Programmable supply priority for PV, Battery or Grid
6.User-adjustable charging current and voltage
7.Programmable multiple operation modes: Grid-tie, off-grid and grid-tie with backup
8.Reserved communication port for BMS
9.Parallel operation up to 9 units

SOLAR POWER

Product specifications

MODEL	HYG6032 TWIN
PHASE	1-phasein/1-phaseout
MAXIMUMPVINPUTPOWER	8000W
RATEDOUTPUTPOWER	6000W
MAXIMUMCHARGINGPOWER	6000W
PVINPUT(DC)	
NominalDCVoltage/MaximumDCVoltag	360VDC/500VDC
Start-upVoltage/InitialFeedingVoltage	120VDC/150VDC
MPPVoltageRange	120VDC~430VDC
NumberofMPPTrackers/MaximumInput	1/27A
GRIDOUTPUT(AC)	
NominalOutputVoltage	220/230/240VAC
OutputVoltageRange	184-264.5VACor195.5-253VAC(Selectable)
NominalOutputCurrent	26A
PowerFactor	>0.99
EFFICIENCY	
MaximumConversionEfciency(DC/AC)	96%
ACINPUT	
ACStart-upVoltage/AutoRestartVoltage	120-140VAC/180VAC
AcceptableInputVoltageRange	90-280VACor170-280VAC
MaximumACInputCurrent	40A
PVINPUT(DC)	
MaximumDCVoltage	500VDC
MPPVoltageRange	120VDC~430VDC
NumberofMPPTrackers/MaximumInput	1/27A
BATTERYMODEOUTPUT(AC)	
NominalOutputVoltage	220/230/240VAC
OutputWaveform	Puresinewave
Efciency(DCtoAC)	93%
PVINPUT(DC)	
NominalDCVoltage/MaximumDCVoltag	360VDC/500VDC
Start-upVoltage/InitialFeedingVoltage	120VDC/150VDC
MPPVoltageRange	120VDC~430VDC
NumberofMPPTrackers/MaximumInput	1/27A
GRIDOUTPUT(AC)	
NominalOutputVoltage	220/230/240VAC
OutputVoltageRange	184-264.5VACor195.5-253VAC(Selectable)
NominalOutputCurrent	26A
ACINPUT	
ACStart-upVoltage/AutoRestartVoltage	120-140VAC/180VAC
AcceptableInputVoltageRange	90-280VACor170-280VAC
MaximumACInputCurrent	40A
BATTERYMODEOUTPUT(AC)	
NominalOutputVoltage	220/230/240VAC
Efciency(DCtoAC)	93%
BATTERY&CHARGER	
NominalDCVoltage	48VDC
MaximumSolarChargingCurrent	120A
MaximumACChargingCurrent	120A
MaximumChargingCurrent	120A
PHYSICAL	
Dimension,DxWxH(mm)	140x295x468
NetWeight(kgs)	12
INTERFACE	
ParallelFunction	Yes,9units
CommunicationPort	USB/RS232/RS485/Wif/Dry-contact
ENVIRONMENT	
Humidity	0~90%RH(Non-condensing)
OperatingTemperature	-10to50°C

SOLAR POWER

MPPT Solar Inverter

VOLTRONIC BOARD

Features:

1.Dual outputs, for smart load management
2.Maximum PVinput current increases to 27A
3.Zero(0ms)transfer time to protect mission-critical loadssuch as servers and ATMs
4.High PV input voltagerange
5.Detachable LCD control module with multiple communications
6.Selectable high power charging current
7.Built-in Wi-Fi for mobile monitoring(App isavailable)
8.Configurable AC/Solar input priority viaLCD setting
9.Reserved communication port forBMS(RS485 Or CAN-BUS)
10.USB On-the-Go function
11.Parallel operation upto 9units

SOLAR POWER

Product specifications

MODEL		Axpert King II TWIN 6.2K
RATED POWER		6200VA/6200W
PARALLEL CAPABILITY		Up to 9 units
GRID INPUT		
Voltage		230 VAC
Voltage Range		110-280 VAC
Frequency Range		50 Hz/60 Hz (Auto sensing) ± 4Hz
Power Factor		≧ 0.98 @ Nominal Voltage (100% Load)
THDi		≦ 10%
LOAD OUTPUT		
AC Voltage Regulation (Line&Batt. Mode)		230VAC ± 5%
Frequency Range (Synchronized Range)		46~54 Hz or 56~64 Hz
Frequency Range (Batt. Mode)		50 Hz ± 0.1 Hz or 60Hz ± 0.1 Hz
Harmonic Distortion		≦ 3 % THD (Linear Load); ≦ 5 % THD (Non-linear Load)
Transfer Time	AC Mode to Batt. Mode	0 ms
	Inverter to Bypass	4 ms (Typical)
Waveform		Pure sine wave
EFFICIENCY		
Line Mode		94%
ECO Mode		98%
Battery Mode		92%
BATTERY		
Battery Voltage		40~66 VDC
Floating Charge Voltage		54 VDC
Overcharge Protection		66 VDC
MPPT SOLAR CHARGER		
Solar Charger type		MPPT
Maximum PV Array Power		7000 W
MPPT Range @ Operating Voltage		120 ~ 430 VDC
Maximum PV Array Open Circuit Voltage		500 VDC
Maxmum Solar Charge Current		120A
Maximum AC Charge Current		120A
PHYSICAL		
Dimension, D x W x H (mm)		140 x 295 x 468
Net Weight (kgs)		12
Communication Interface		RS232, USB, Dry contact, WI-FI, RS485
ENVIRONMENT		
Humidity		5% to 95% Relative Humidity(Non-condensing)
Operating Temperature		-10°C to 50°C
Storage Temperature		-15°C to 60°C

SOLAR POWER

IP65 Hybrid Solar Inverter

VOLTRONIC BOARD

Features:

1.IP65 waterproof and dustproof
2.Dual outputs for smart load management
3.Self-consumption and Feed-in to the grid
4.Programmable supply priority for PV, Battery or Grid
5.Reserved communication port for BMS (RS485,CAN-BUS or RS232)
6.User-adjustable charging current and voltage
7.Programmable multiple operation modes: Grid-tie, off-grid and grid-tie with backup
8.Parallel operation up to 9 units for 6kw, 6 units for 8kw

SOLAR POWER

Product specifications

Model	VIV WP 6K
PHASE	1-phase in /1-phase out
MAXIMUM PV INPUT POWER	7000W
RATED OUTPUT POWER	6000VA/6000W
MAXIMUM CHARGING POWER	6000W
GRID-TIE OPERATION	
PV INPUT (DC)	
Maximum DC Voltage	550VDC
Start-up Voltage / Initial Feeding Voltage	120VDC/150VDC
MPP Voltage Range	120VDC-450VDC
Number of MPP Trackers / Maximum Input Current	1x30A
GRID OUTPUT(AC)	
Nominal Output Voltage	220/230/240VAC
Output Voltage Range	184-264.5VAC or 195.5-253VAC or 184-264.4VAC (Selectable)
Nominal Output Current	26A
Power Factor	> 0.99
EFFICIENCY	
Maximum Conversion Efficiency(DC/AC)	97%
OFF-GRID OPERATION	
AC INPUT	
AC Start-up Voltage /Auto Restart Voltage	120-140VAC/180VAC
Acceptable Input Voltage Range	90-280VAC or 170-280VAC
Frequency Range	50Hz/60Hz (Auto sensing)
Maximum AC input Current	40 A
PV INPUT (DC)	
Maximum DC Voltage	550VDC
MPP Voltage Range	120VDC-450VDC
Number of MPP Trackers / Maximum Input Current	1x30A
BATTERY MODE OUTPUT (AC)	
Nominal Output Voltage	220/230/240VAC
Output Waveform	Pure sine wave
Efficiency (DC to AC)	93%
HYBRID OPERATION	
PV INPUT(DC)	
Maximum DC Voltage	550VDC
Start-up Voltage /Initial Feeding Voltage	120VDC/150VDC
MPP Voltage Range	120VDC-450VDC
Number of MPP Trackers / Maximum input Current	1x30A
GRID OUTPUT(AC)	
Nominal Output Voltage	220/230/240VAC
Output Voltage Range	184-264.5VAC or 195.5-253VAC or 184-264.4VAC (Selectable)
Nominal Output Current	26A
AC INPUT	
AC Start-up Voltage / Auto Restart Voltage	120-140VAC/180VAC
Acceptable Input Voltage Range	90-280VAC or 170-280VAC
Maximum AC input Current	40A
BATTERY MODE OUTPUT (AC)	
Nominal Output Voltage	220/230/240VAC
Efficiency (DC to AC)	93%
BATTERY & CHARGER	
Nominal DC Voltage	48VDC
Maximum Solar Charging Current	120A
Maximum AC Charging Current	120A
Maximum Charging Current	120A
GENERAL	
PHYSICAL	
Dimension,DxWxH(mm)	192x360x665
Net Weight (kgs)	22.5
INTERFACE	
Parallel Function	Yes, 9 units
Communication Port	USB or RS-232/Dry Contact/RS485/Wi-Fi
ENVIRONMENT	
Humidity	0-95% RH (No condensing)
IP degree	IP65
Operating Temperature	-25°C to 50°C

SOLAR POWER

IP65 Hybrid Solar Inverter

VOLTRONIC BOARD

Features:

1.IP65 waterproof and dustproof
2.Dual outputs for smart load management
3.Self-consumption and Feed-in to the grid
4.Programmable supply priority for PV, Battery or Grid
5.Reserved communication port for BMS (RS485,CAN-BUS or RS232)
6.User-adjustable charging current and voltage
7.Programmable multiple operation modes: Grid-tie, off-grid and grid-tie with backup
8.Parallel operation up to 9 units for 6kw, 6 units for 8kw

SOLAR POWER

Product specifications

Model	VIV WP 8K
PHASE	1-phase in /1-phase out
MAXIMUM PV INPUT POWER	10000W
RATED OUTPUT POWER	8000VA/8000W
MAXIMUM CHARGING POWER	8000W
GRID-TIE OPERATION	
PV INPUT (DC)	
Maximum DC Voltage	550VDC
Start-up Voltage / Initial Feeding Voltage	120VDC/150VDC
MPP Voltage Range	90VDC-450VDC
Number of MPP Trackers / Maximum Input Current	2x30A
GRID OUTPUT(AC)	
Nominal Output Voltage	220/230/240VAC
Output Voltage Range	184-264.5VAC or 195.5-253VAC or 184-264.4VAC (Selectable)
Nominal Output Current	35A
Power Factor	> 0.99
EFFICIENCY	
Maximum Conversion Efficiency(DC/AC)	97%
OFF-GRID OPERATION	
AC INPUT	
AC Start-up Voltage /Auto Restart Voltage	120-140VAC/180VAC
Acceptable Input Voltage Range	90-280VAC or 170-280VAC
Frequency Range	50Hz/60Hz (Auto sensing)
Maximum AC input Current	40 A
PV INPUT (DC)	
Maximum DC Voltage	550VDC
MPP Voltage Range	90VDC-450VDC
Number of MPP Trackers / Maximum Input Current	2x30A
BATTERY MODE OUTPUT (AC)	
Nominal Output Voltage	220/230/240VAC
Output Waveform	Pure sine wave
Efficiency (DC to AC)	93%
HYBRID OPERATION	
PV INPUT(DC)	
Maximum DC Voltage	550VDC
Start-up Voltage /Initial Feeding Voltage	120VDC/150VDC
MPP Voltage Range	90VDC-450VDC
Number of MPP Trackers / Maximum input Current	2x30A
GRID OUTPUT(AC)	
Nominal Output Voltage	220/230/240VAC
Output Voltage Range	184-264.5VAC or 195.5-253VAC or 184-264.4VAC (Selectable)
Nominal Output Current	35A
AC INPUT	
AC Start-up Voltage / Auto Restart Voltage	120-140VAC/180VAC
Acceptable Input Voltage Range	90-280VAC or 170-280VAC
Maximum AC input Current	54A
BATTERY MODE OUTPUT (AC)	
Nominal Output Voltage	220/230/240VAC
Efficiency (DC to AC)	93%
BATTERY & CHARGER	
Nominal DC Voltage	48VDC
Maximum Solar Charging Current	150A
Maximum AC Charging Current	120A
Maximum Charging Current	150A
GENERAL	
PHYSICAL	
Dimension,DxWxH(mm)	210x435x665
Net Weight (kgs)	32
INTERFACE	
Parallel Function	Yes, 6 units
Communication Port	USB or RS-232/Dry Contact/RS485/Wi-Fi
ENVIRONMENT	
Humidity	0-95% RH (No condensing)
IP degree	IP65
Operating Temperature	-25°C to 50°C

SOLAR POWER

MPPT Solar Inverter

VOLTRONIC BOARD

Features:

1.Customizable status LED rings with RGB lights
2.Touchable buttons with large 5inch colored LCD
3.Built-in Wi-Fi for mobile monitoring (Android/iOS App is available)
4.Supports USB On-the-Go function.
5.Datalog events are stored in the inverter.
6.Reserved communication port for BMS (RS485, CAN-BUS, or RS232)
7.Replaceable fan design for ease maintenance
8.Battery is independent design.
9.Configurable AC/PV output usage timer and prioritization.
10.Selectable high power charging current.
11.Compatible with Utility Mains or generator input.
12.Built-in DC output for DC fan, LED bulb, router and so on.
13.Parallel operation with 6 units

SOLAR POWER

Product specifications

Model	MAX II 8KW
Rated Power	8000VA/8000W
Parallel Capability	Yes,6 units
INPUT	
Voltage	230 VAC
Select−able Voltage Range	170−280VAC (For Personal computers) 90−280VAC (For Home Appliances)
Frequency Range	50 Hz/60 Hz(Auto sensing)
OUTPUT	
AC Voltage Regulation (Batt. Mode)	230 VAC ± 5%
Surge Power	16000VA
Efficiency (Peak)	93%
Transfer Time	15ms(For Personal Computers), 20ms(For Home Appliances)
Waveform	Pure sine wave
No Load Power Consumption	<70W
DC Voltage (Optional)	12VDC ± 5%, 100W
BATTERY	
Battery Voltage	48 VDC
Floating Charge Voltage	54 VDC
Overcharge Protection	66 VDC
MPPT SOLAR CHARGER	
Solar charger type	MPPT
Max PV Array Power	10000W (5000x2)
MPP Range @operating Voltage	90~450VDC
Max PV Array Open Circuit Voltage	500VDC
Max Solar Charge Current	150A
Max AC Charge Current	120A
Max Charge Current	150A
PHYSICAL	
Dimension, D x W x H (mm)	158.4 x 502.5 x 530.8
Net Weight (kgs)	19
Communication Interface	USB/RS232/RS485/WIFI/Dry−contact
OPERATING ENVIRONMENT	
Humidity	5% to 95% Relative Humidity (Non−condensing)
Operating Temperature	− 10°C to 50°C
Storage Temperature	− 15°C to 60°C
STANDARD	
Compliance Safety	CE

SOLAR POWER

MPPT Solar Inverter

VOLTRONIC BOARD

Features:

1.Customizable status LED rings with RGB lights
2.Touchable buttons with large 5inch colored LCD
3.Built-in Wi-Fi for mobile monitoring (Android/iOS App is available)
4.Supports USB On-the-Go function.
5.Datalog events are stored in the inverter.
6.Reserved communication port for BMS (RS485, CAN-BUS, or RS232)
7.Replaceable fan design for ease maintenance
8.Battery is independent design.
9.Configurable AC/PV output usage timer and prioritization.
10.Selectable high power charging current.
11.Compatible with Utility Mains or generator input.
12.Built-in DC output for DC fan, LED bulb, router and so on.
13.Parallel operation with 6 units

SOLAR POWER

Product specifications

Model	MAX II 11KW
Rated Power	11000VA/11000W
Parallel Capability	Yes,6 units
INPUT	
Voltage	230 VAC
Select-able Voltage Range	170-280VAC (For Personal computers) 90-280VAC (For Home Appliances)
Frequency Range	50 Hz/60 Hz(Auto sensing)
OUTPUT	
AC Voltage Regulation (Batt. Mode)	230 VAC ± 5%
Surge Power	22000VA
Efficiency (Peak)	93%
Transfer Time	15ms(For Personal Computers), 20ms(For Home Appliances)
Waveform	Pure sine wave
No Load Power Consumption	<70W
DC Voltage (Optional)	12VDC ± 5%, 100W
BATTERY	
Battery Voltage	48 VDC
Floating Charge Voltage	54 VDC
Overcharge Protection	66 VDC
MPPT SOLAR CHARGER	
Solar charger type	MPPT
Max PV Array Power	13000W (6500x2)
MPP Range @operating Voltage	90~450VDC
Max PV Array Open Circuit Voltage	500VDC
Max Solar Charge Current	150A
Max AC Charge Current	150A
Max Charge Current	150A
PHYSICAL	
Dimension, D x W x H (mm)	158.4 x 502.5 x 530.8
Net Weight (kgs)	21
Communication Interface	USB/RS232/RS485/WIFI/Dry-contact
OPERATING ENVIRONMENT	
Humidity	5% to 95% Relative Humidity (Non-condensing)
Operating Temperature	- 10°C to 50°C
Storage Temperature	- 15°C to 60°C
STANDARD	
Compliance Safety	CE

SOLAR POWER

MPPT Solar Inverter

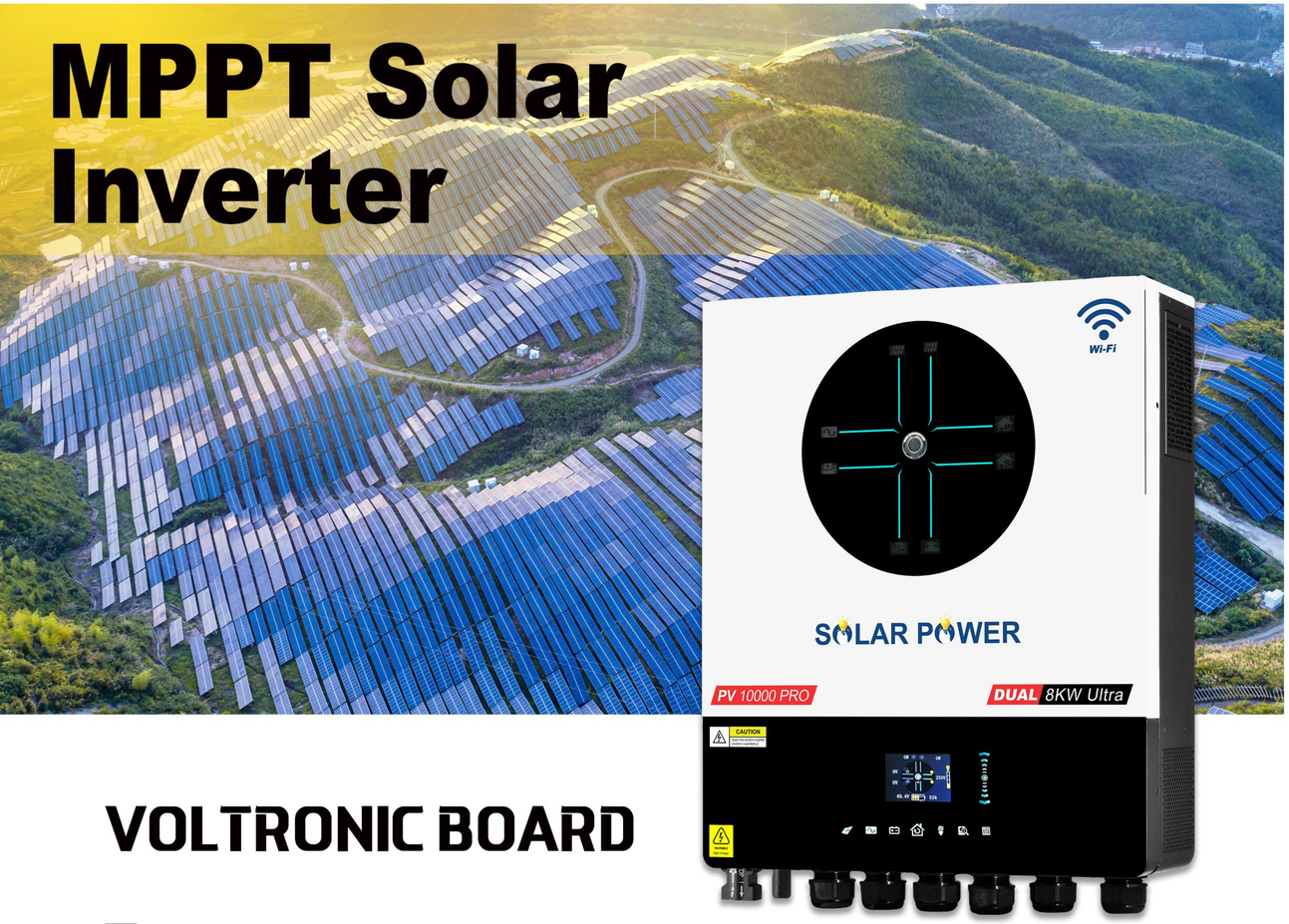

VOLTRONIC BOARD

Features:

1.Dual outputs and dual inputs for smart load management
2.Two independent AC power sources connected and switched automatically
3.Built-in current transformer sensor to meet self-consumption application
4.Support external BTS (Battery Temperature Sensor) detection
5.Built-in power status lighting indicators
6.Built-in 2.8" colored LCD with slide operation
7.Built-in Wi-Fi for mobile monitoring and OTA firmware upgrade
8.Supports USB On-the-Go function
9.Reserved communication port for BMS (RS485, CAN-BUS Or RS232)
10.Support optional GFCI, Rapid shutdown, AFCI detection
11.Parallel operation with 6 units

SOLAR POWER

Product specifications

Model	Axpert Ultra 8K
Rated Power	8000VA/8000W
Parallel Capability	Yes,6 units
INPUT	
Voltage	230 VAC
Select−able Voltage Range	170−280VAC (For Personal computers) 90−280VAC (For Home Appliances)
Frequency Range	50 Hz/60 Hz(Auto sensing)
OUTPUT	
AC Voltage Regulation (Batt. Mode)	230 VAC ± 5%
Surge Power	16000VA
Efficiency (Peak)	93%
Transfer Time	15ms(For Personal Computers), 20ms(For Home Appliances)
Waveform	Pure sine wave
No Load Power Consumption	<70W
DC Voltage (Optional)	12VDC ± 5%, 100W
BATTERY	
Battery Voltage	48 VDC
Floating Charge Voltage	54 VDC
Overcharge Protection	66 VDC
MPPT SOLAR CHARGER	
Solar charger type	MPPT
Max PV Array Power	10000W (5000x2)
MPP Range @operating Voltage	90~450VDC
Max PV Array Open Circuit Voltage	500VDC
Max Solar Charge Current	150A
Max AC Charge Current	120A
Max Charge Current	150A
PHYSICAL	
Dimension, D x W x H (mm)	158.4 x 502.5 x 530.8
Net Weight (kgs)	19
Communication Interface	USB/RS232/RS485/WIFI/Dry−contact
OPERATING ENVIRONMENT	
Humidity	5% to 95% Relative Humidity (Non−condensing)
Operating Temperature	− 10°C to 50°C
Storage Temperature	− 15°C to 60°C
STANDARD	
Compliance Safety	CE

SOLAR POWER

MPPT Solar Inverter

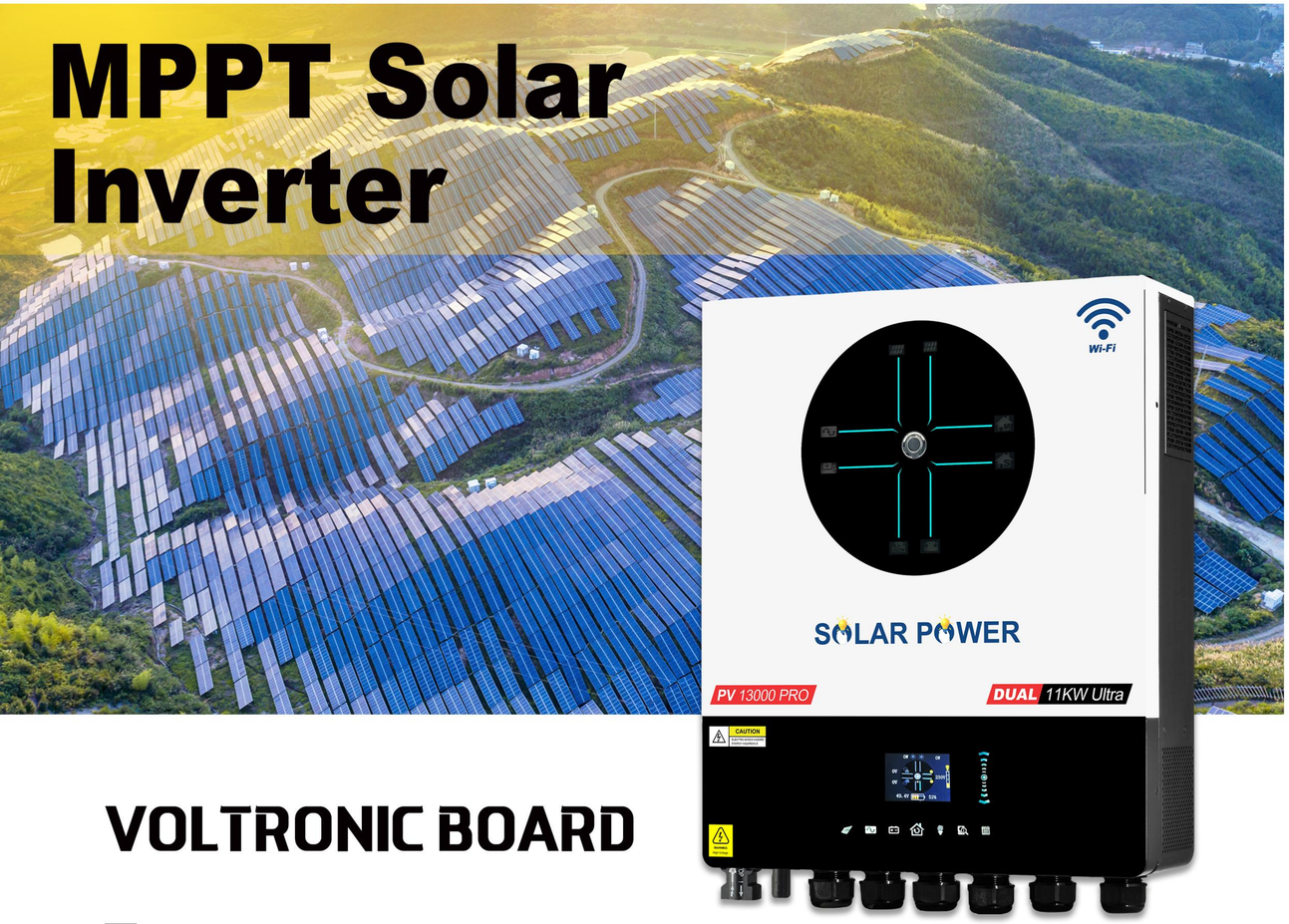

VOLTRONIC BOARD

Features:

1.Dual outputs and dual inputs for smart load management
2.Two independent AC power sources connected and switched automatically
3.Built-in current transformer sensor to meet self-consumption application
4.Support external BTS (Battery Temperature Sensor) detection
5.Built-in power status lighting indicators
6.Built-in 2.8" colored LCD with slide operation
7.Built-in Wi-Fi for mobile monitoring and OTA firmware upgrade
8.Supports USB On-the-Go function
9.Reserved communication port for BMS (RS485, CAN-BUS Or RS232)
10.Support optional GFCI, Rapid shutdown, AFCI detection
11.Parallel operation with 6 units

SOLAR POWER

Product specifications

Model	Axpert Ultra 11K
Rated Power	11000VA/11000W
Parallel Capability	Yes,6 units
INPUT	
Voltage	230 VAC
Select−able Voltage Range	170−280VAC (For Personal computers) 90−280VAC (For Home Appliances)
Frequency Range	50 Hz/60 Hz(Auto sensing)
OUTPUT	
AC Voltage Regulation (Batt. Mode)	230 VAC ± 5%
Surge Power	22000VA
Efficiency (Peak)	93%
Transfer Time	15ms(For Personal Computers), 20ms(For Home Appliances)
Waveform	Pure sine wave
No Load Power Consumption	<70W
DC Voltage (Optional)	12VDC ± 5%, 100W
BATTERY	
Battery Voltage	48 VDC
Floating Charge Voltage	54 VDC
Overcharge Protection	66 VDC
MPPT SOLAR CHARGER	
Solar charger type	MPPT
Max PV Array Power	13000W (6500x2)
MPP Range @operating Voltage	90~450VDC
Max PV Array Open Circuit Voltage	500VDC
Max Solar Charge Current	150A
Max AC Charge Current	150A
Max Charge Current	150A
PHYSICAL	
Dimension, D x W x H (mm)	158.4 x 502.5 x 530.8
Net Weight (kgs)	21
Communication Interface	USB/RS232/RS485/WIFI/Dry−contact
OPERATING ENVIRONMENT	
Humidity	5% to 95% Relative Humidity (Non−condensing)
Operating Temperature	− 10°C to 50°C
Storage Temperature	− 15°C to 60°C
STANDARD	
Compliance Safety	CE

SOLAR POWER

MPPT Solar Inverter

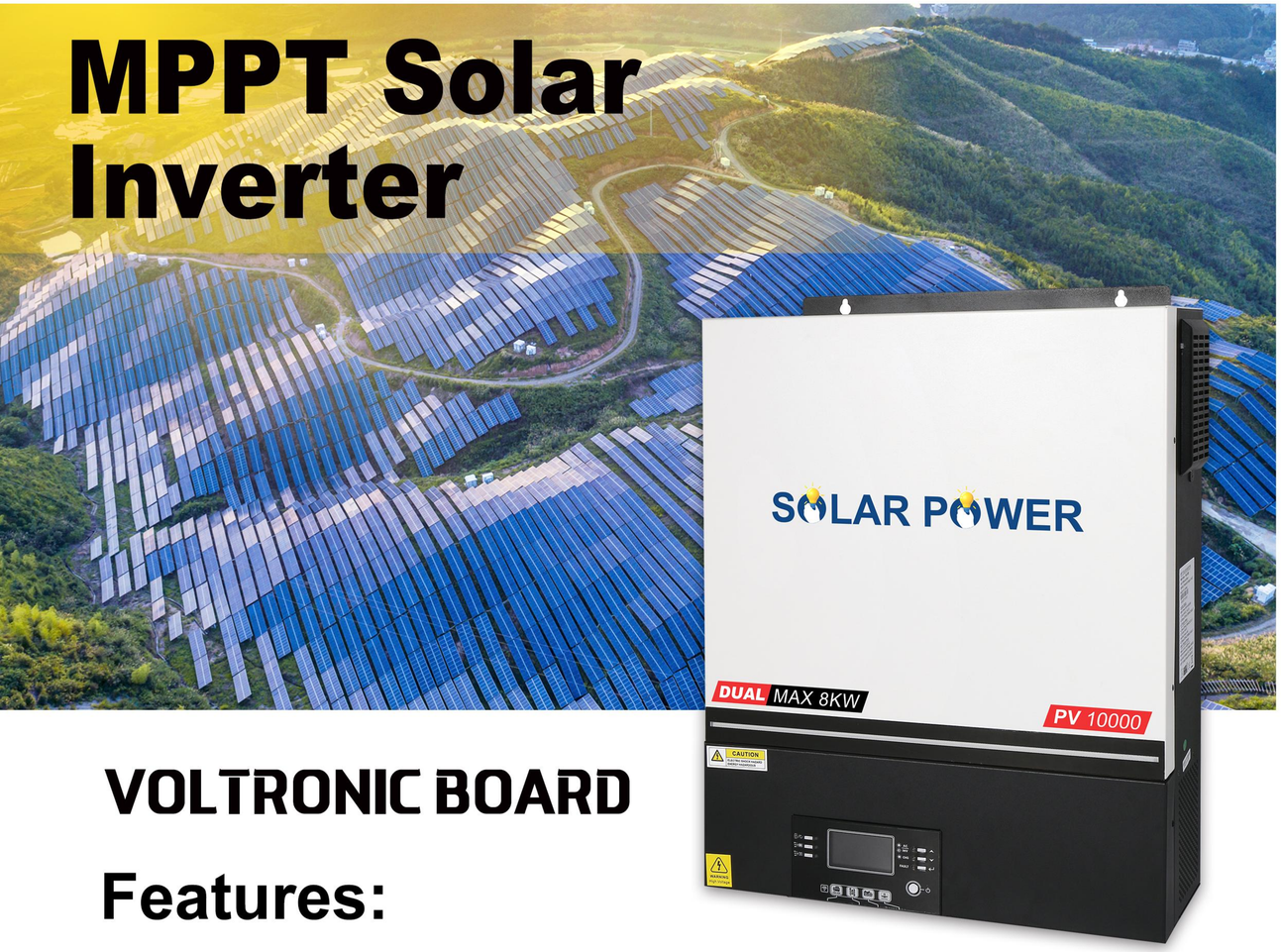

VOLTRONIC BOARD

Features:

1.Customizable status LED rings with RGB lights
2.Touchable buttons with large 5inch colored LCD.
3.Built-in Wi-Fi for mobile monitoring (Android/iOS App is available).
4.Supports USB On-the-Go function.
5.Datalog events are stored in the inverter.
6.Reserved communication port for BMS (RS485, CAN-BUS, or RS232).
7.Replaceable fan design for ease maintenance
8.Battery is independent design.
9.Configurable AC/PV output usage timer and prioritization.
10.Selectable high power charging current.
11.Compatible with Utility Mains or generator input.
12.Built-in DC output for DC fan, LED bulb, router and so on.
13.Parallel operation with 6 units

SOLAR POWER

Product specifications

MODEL	Axpert MAX TWIN 8KW
RATED POWER	8000VA/8000W
PARALLEL CAPABILITY	YES, 6 units
INPUT	
Voltage	230 VAC
Selectable Voltage Range	170-280 VAC (For Personal Computers) 90-280 VAC (For Home Appliances)
Frequency Range	50 Hz/60 Hz (Auto sensing)
OUTPUT	
AC Voltage Regulation (Batt. Mode)	230VAC ± 5%
Surge Power	16000VA
Efficiency (Peak)	93%
Transfer Time	15 ms (For Personal Computers), 20 ms (For Home Appliances)
Waveform	Pure sine wave
Optional DC Voltage	12 VDC ± 5%, 100W
BATTERY	
Battery Voltage	48 VDC
Floating Charge Voltage	54 VDC
Overcharge Protection	66 VDC
MPPT SOLAR CHARGER	
Solar Charger Type	MPPT
Maximum PV Array Power	10000W (5000W x 2)
MPPT Range @ Operating Voltage	90 ~ 450 VDC
Maximum PV Array Open Circuit Voltage	500 VDC
Maximum PV Input Current	27A x 2(MAX 40A)
Maxmum Solar Charge Current	150A
Maximum AC Charge Current	120A
Maximum Charge Current	150A
PHYSICAL	
Dimension, D x W x H (mm)	158.4 x 502.5 x 530.8
Net Weight (kgs)	19
Communication Interface	USB/RS232/RS485/WiFi/Dry-contact
OPERATING ENVIRONMENT	
Humidity	5% to 95% Relative Humidity(Non-condensing)
Operating Temperature	-10°C to 50°C
Storage Temperature	-15°C to 60°C
STANDARD	
Compliance Safety	CE

SOLAR POWER

MPPT Solar Inverter

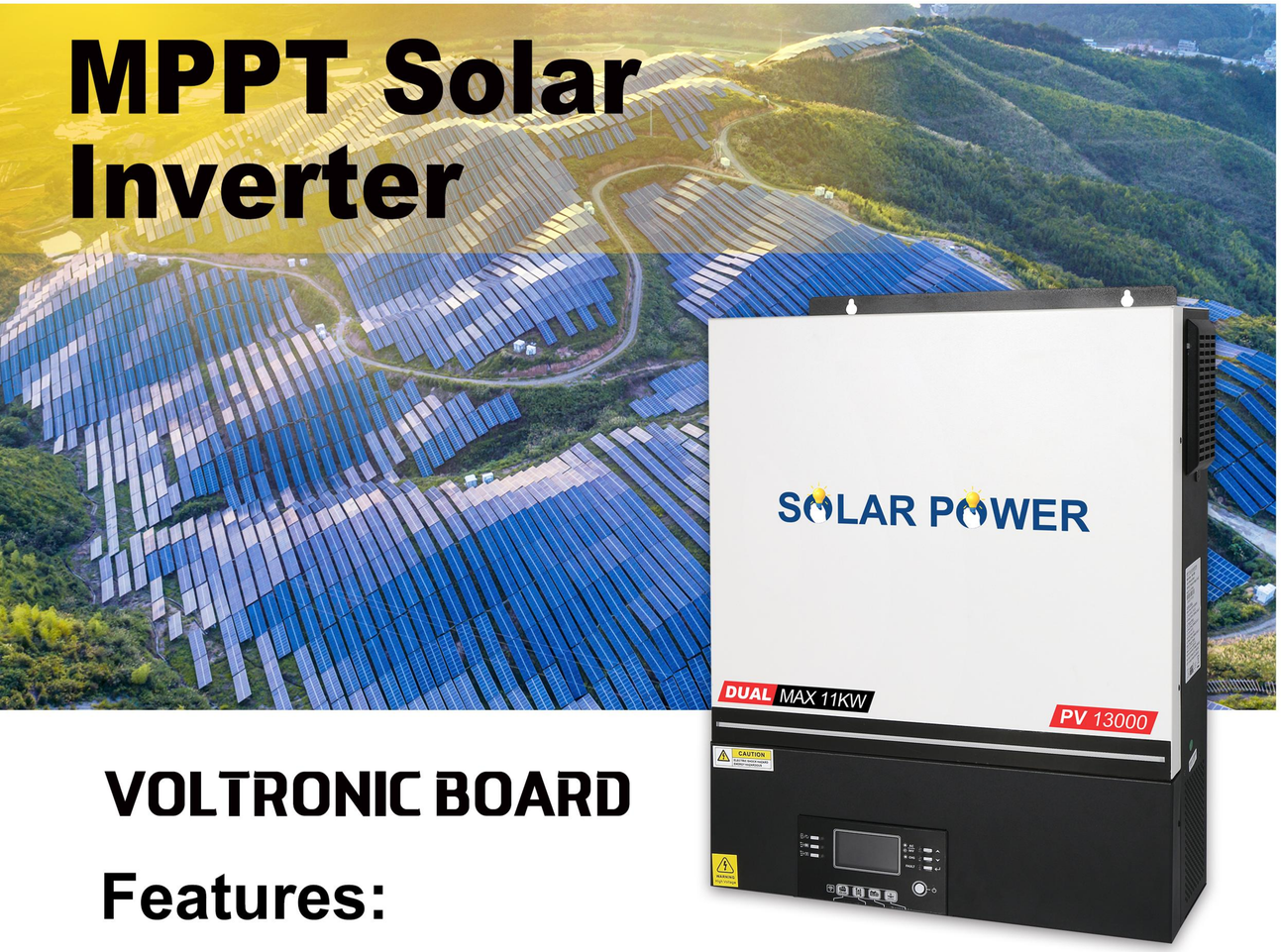

VOLTRONIC BOARD

Features:

1.Customizable status LED rings with RGB lights
2.Touchable buttons with large 5inch colored LCD.
3.Built-in Wi-Fi for mobile monitoring (Android/iOS App is available).
4.Supports USB On-the-Go function.
5.Datalog events are stored in the inverter.
6.Reserved communication port for BMS (RS485, CAN-BUS, or RS232).
7.Replaceable fan design for ease maintenance
8.Battery is independent design.
9.Configurable AC/PV output usage timer and prioritization.
10.Selectable high power charging current.
11.Compatible with Utility Mains or generator input.
12.Built-in DC output for DC fan, LED bulb, router and so on.
13.Parallel operation with 6 units

SOLAR POWER

Product specifications

MODEL	Axpert MAX TWIN 11KW
RATED POWER	11000VA/11000W
PARALLEL CAPABILITY	YES, 6 units
INPUT	
Voltage	230 VAC
Selectable Voltage Range	170-280 VAC (For Personal Computers) 90-280 VAC (For Home Appliances)
Frequency Range	50 Hz/60 Hz (Auto sensing)
OUTPUT	
AC Voltage Regulation (Batt. Mode)	230VAC ± 5%
Surge Power	22000VA
Efficiency (Peak)	93%
Transfer Time	15 ms (For Personal Computers), 20 ms (For Home Appliances)
Waveform	Pure sine wave
Optional DC Voltage	12 VDC ± 5%, 100W
BATTERY	
Battery Voltage	48 VDC
Floating Charge Voltage	54 VDC
Overcharge Protection	66 VDC
MPPT SOLAR CHARGER	
Solar Charger Type	MPPT
Maximum PV Array Power	13000W (6500W x 2)
MPPT Range @ Operating Voltage	90 ~ 450 VDC
Maximum PV Array Open Circuit Voltage	500 VDC
Maximum PV Input Current	27A x 2(MAX 40A)
Maxmum Solar Charge Current	150A
Maximum AC Charge Current	150A
Maximum Charge Current	150A
PHYSICAL	
Dimension, D x W x H (mm)	158.4 x 502.5 x 530.8
Net Weight (kgs)	21
Communication Interface	USB/RS232/RS485/WiFi/Dry-contact
OPERATING ENVIRONMENT	
Humidity	5% to 95% Relative Humidity(Non-condensing)
Operating Temperature	-10°C to 50°C
Storage Temperature	-15°C to 60°C
STANDARD	
Compliance Safety	CE

SOLAR POWER

IP65 Hybrid Solar Inverter

VOLTRONIC BOARD

Features:

1.IP65 waterproof and dustproof makes the inverter available forvarious working conditions.
2.Built-in WiFi for mobile monitoring (App is available)
3.150% unbalaned load support
4.Optional dual outputs for smart load management (check sales)
5.Buit-in AC coupled function
6.User-adjustable charging current and voltage
7.Reserved communication port for BMS (RS485)
8.Parallel operation up to 6 units

SOLAR POWER

Product specifications

MODEL	10KW
MAXIMUM PV INPUT POWER	14500W
RATED OUTPUT POWER	10000 W
MAXIMUM CHARGING POWER	10000 W
GRID-TIE OPERATION	
PV INPUT (DC)	
Nominal DC Voltage /Maximum DC	720 VDC / 1000 VDC
Start-up Voltage / Initial Feeding	320 VDC / 350 VDC
MPP Voltage Range	350 VDC ~ 850 VDC
Number of MPP Trackers /	2 / A: 27A, B: 13A
Number of Strings Per MPP Tracker	A: 2, B: 1
GRID OUTPUT (AC)	
Nominal Output Voltage	230 VAC (P-N) / 400 VAC (P-P)
Output Voltage Range	184 - 265 VAC per phase
Nominal Output Current	14.5 A per phase
Power Factor range	0.9 lag ~ 0.9 lead
EFFICIENCY	
Maximum Conversion Efficiency	>96%
European Efficiency@ Vnominal	>95%
OFF-GRIDOPERATION	
AC INPUT	
AC Start-up Voltage / Auto Restart	120 - 140 VAC / 180 VAC
Acceptable Input Voltage Range	170 - 290 VAC per phase
Maximum AC Input Current	40 A
PV INPUT (DC)	
Maximum DC Power	14500W
Maximum DC Voltage	1000 VDC
MPP Voltage Range	350 VDC ~ 850 VDC
Number of MPP Trackers /	2 / A: 27A, B: 13A
Number of Strings Per MPP Tracker	A: 2, B: 1
BATTERY MODE OUTPUT (AC)	
Nominal Output Voltage	230 VAC (P-N) / 400 VAC (P-P)
Output Waveform	Pure sine wave
Efficiency (DC to AC)	91%
HYBRID OPERATION	
PV INPUT (DC)	
Maximum DC Voltage	1000 VDC
Start-up Voltage / Initial Feeding	320 VDC / 350 VDC
MPP Voltage Range	350 VDC ~ 850 VDC
Number of MPP Trackers /	2 / A: 27A, B: 13A
Number of Strings Per MPP Tracker	A: 2, B: 1
GRID OUTPUT (AC)	
Nominal Output Voltage	230 VAC (P-N) / 400 VAC (P-P)
Output Voltage Range	184 - 265 VAC per phase
Nominal Output Current	14.5 A per phase
AC INPUT	
AC Start-up Voltage / Auto Restart	120 - 140 VAC / 180 VAC
Acceptable Input Voltage Range	170 - 290 VAC per phase
Maximum AC Input Current	40 A
BATTERY MODE OUTPUT (AC)	
Nominal Output Voltage	230 VAC (P-N) / 400 VAC (P-P)
Efficiency (DC to AC)	91%
BATTERY & CHARGER	
Battery Voltage Range	40 ~ 62 VDC
Maximum Charging Current	220 A
GENERAL	
PHYSICAL	
Dimension, D x W x H (mm)	247 x 500 x 650
Net Weight (kgs)	42
INTERFACE	
Communication Port	RS-232, RS-485, USB, CAN and Wi-Fi
Intelligent Slot	Optional for SNMP and Modbus cards
ENVIRONMENT	
Humidity	0 ~ 100% RH (Non-condensing)
Operating Temperature	-25 to 60°C, > 45°C power derating
Altitude	0 ~ 1000 m**

SOLAR POWER

IP65 Hybrid Solar Inverter

VOLTRONIC BOARD

Features:

1.IP65 waterproof and dustproof makes the inverter available forvarious working conditions.
2.Built-in WiFi for mobile monitoring (App is available)
3.150% unbalaned load support
4.Optional dual outputs for smart load management (check sales)
5.Buit-in AC coupled function
6.User-adjustable charging current and voltage
7.Reserved communication port for BMS (RS485)
8.Parallel operation up to 6 units

SOLAR POWER

Product specifications

MODEL	12KW
MAXIMUM PV INPUT POWER	16000W
RATED OUTPUT POWER	12000 W
MAXIMUM CHARGING POWER	12000 W
GRID-TIE OPERATION	
PV INPUT (DC)	
Nominal DC Voltage /Maximum DC	720 VDC / 1000 VDC
Start-up Voltage / Initial Feeding	320 VDC / 350 VDC
MPP Voltage Range	350 VDC ~ 850 VDC
Number of MPP Trackers /	2 / A: 27A, B: 27A
Number of Strings Per MPP Tracker	A: 2, B: 2
GRID OUTPUT (AC)	
Nominal Output Voltage	230 VAC (P-N) / 400 VAC (P-P)
Output Voltage Range	184 - 265 VAC per phase
Nominal Output Current	17.4 A per phase
Power Factor range	0.9 lag ~ 0.9 lead
EFFICIENCY	
Maximum Conversion Efficiency	>96%
European Efficiency@ Vnominal	>95%
OFF-GRIDOPERATION	
AC INPUT	
AC Start-up Voltage / Auto Restart	120 - 140 VAC / 180 VAC
Acceptable Input Voltage Range	170 - 290 VAC per phase
Maximum AC Input Current	40 A
PV INPUT (DC)	
Maximum DC Power	16000W
Maximum DC Voltage	1000 VDC
MPP Voltage Range	350 VDC ~ 850 VDC
Number of MPP Trackers /	2 / A: 27A, B: 27A
Number of Strings Per MPP Tracker	A: 2, B: 2
BATTERY MODE OUTPUT (AC)	
Nominal Output Voltage	230 VAC (P-N) / 400 VAC (P-P)
Output Waveform	Pure sine wave
Efficiency (DC to AC)	91%
HYBRID OPERATION	
PV INPUT (DC)	
Maximum DC Voltage	1000 VDC
Start-up Voltage / Initial Feeding	320 VDC / 350 VDC
MPP Voltage Range	350 VDC ~ 850 VDC
Number of MPP Trackers /	2 / A: 27A, B: 27A
Number of Strings Per MPP Tracker	A: 2, B: 2
GRID OUTPUT (AC)	
Nominal Output Voltage	230 VAC (P-N) / 400 VAC (P-P)
Output Voltage Range	184 - 265 VAC per phase
Nominal Output Current	17.4 A per phase
AC INPUT	
AC Start-up Voltage / Auto Restart	120 - 140 VAC / 180 VAC
Acceptable Input Voltage Range	170 - 290 VAC per phase
Maximum AC Input Current	40 A
BATTERY MODE OUTPUT (AC)	
Nominal Output Voltage	230 VAC (P-N) / 400 VAC (P-P)
Efficiency (DC to AC)	91%
BATTERY & CHARGER	
Battery Voltage Range	40 ~ 62 VDC
Maximum Charging Current	250 A
GENERAL	
PHYSICAL	
Dimension, D x W x H (mm)	255x 660 x 750
Net Weight (kgs)	70
INTERFACE	
Communication Port	RS-232, RS-485, USB, CAN and Wi-Fi
Intelligent Slot	Optional for SNMP and Modbus cards
ENVIRONMENT	
Humidity	0 ~ 100% RH (Non-condensing)
Operating Temperature	-25 to 60°C, > 45°C power derating
Altitude	0 ~ 1000 m**

SOLAR POWER

IP65 Hybrid Solar Inverter

VOLTRONIC BOARD

Features:

1.IP65 waterproof and dustproof makes the inverter available forvarious working conditions.
2.Built-in WiFi for mobile monitoring (App is available)
3.150% unbalaned load support
4.Optional dual outputs for smart load management (check sales)
5.Buit-in AC coupled function
6.User-adjustable charging current and voltage
7.Reserved communication port for BMS (RS485)
8.Parallel operation up to 6 units

SOLAR POWER

Product specifications

MODEL	15KW
MAXIMUM PV INPUT POWER	16000W
RATED OUTPUT POWER	15000 W
MAXIMUM CHARGING POWER	15000 W
GRID-TIE OPERATION	
PV INPUT (DC)	
Nominal DC Voltage /Maximum DC	720 VDC / 1000 VDC
Start-up Voltage / Initial Feeding	320 VDC / 350 VDC
MPP Voltage Range	350 VDC ~ 850 VDC
Number of MPP Trackers /	2 / A: 27A, B: 27A
Number of Strings Per MPP Tracker	A: 2, B: 2
GRID OUTPUT (AC)	
Nominal Output Voltage	230 VAC (P-N) / 400 VAC (P-P)
Output Voltage Range	184 - 265 VAC per phase
Nominal Output Current	21.7 A per phase
Power Factor range	0.9 lag ~ 0.9 lead
EFFICIENCY	
Maximum Conversion Efficiency	>96%
European Efficiency@ Vnominal	>95%
OFF-GRIDOPERATION	
AC INPUT	
AC Start-up Voltage / Auto Restart	120 - 140 VAC / 180 VAC
Acceptable Input Voltage Range	170 - 290 VAC per phase
Maximum AC Input Current	40 A
PV INPUT (DC)	
Maximum DC Power	16000W
Maximum DC Voltage	1000 VDC
MPP Voltage Range	350 VDC ~ 850 VDC
Number of MPP Trackers /	2 / A: 27A, B: 27A
Number of Strings Per MPP Tracker	A: 2, B: 2
BATTERY MODE OUTPUT (AC)	
Nominal Output Voltage	230 VAC (P-N) / 400 VAC (P-P)
Output Waveform	Pure sine wave
Efficiency (DC to AC)	91%
HYBRID OPERATION	
PV INPUT (DC)	
Maximum DC Voltage	1000 VDC
Start-up Voltage / Initial Feeding	320 VDC / 350 VDC
MPP Voltage Range	350 VDC ~ 850 VDC
Number of MPP Trackers /	2 / A: 27A, B: 27A
Number of Strings Per MPP Tracker	A: 2, B: 2
GRID OUTPUT (AC)	
Nominal Output Voltage	230 VAC (P-N) / 400 VAC (P-P)
Output Voltage Range	184 - 265 VAC per phase
Nominal Output Current	21.7 A per phase
AC INPUT	
AC Start-up Voltage / Auto Restart	120 - 140 VAC / 180 VAC
Acceptable Input Voltage Range	170 - 290 VAC per phase
Maximum AC Input Current	40 A
BATTERY MODE OUTPUT (AC)	
Nominal Output Voltage	230 VAC (P-N) / 400 VAC (P-P)
Efficiency (DC to AC)	91%
BATTERY & CHARGER	
Battery Voltage Range	40 ~ 62 VDC
Maximum Charging Current	300 A
GENERAL	
PHYSICAL	
Dimension, D x W x H (mm)	255x 660 x 750
Net Weight (kgs)	73
INTERFACE	
Communication Port	RS-232, RS-485, USB, CAN and Wi-Fi
Intelligent Slot	Optional for SNMP and Modbus cards
ENVIRONMENT	
Humidity	0 ~ 100% RH (Non-condensing)
Operating Temperature	-25 to 60°C, > 45°C power derating
Altitude	0 ~ 1000 m**

SOLAR POWER

LiFePO4 Lithium Battery

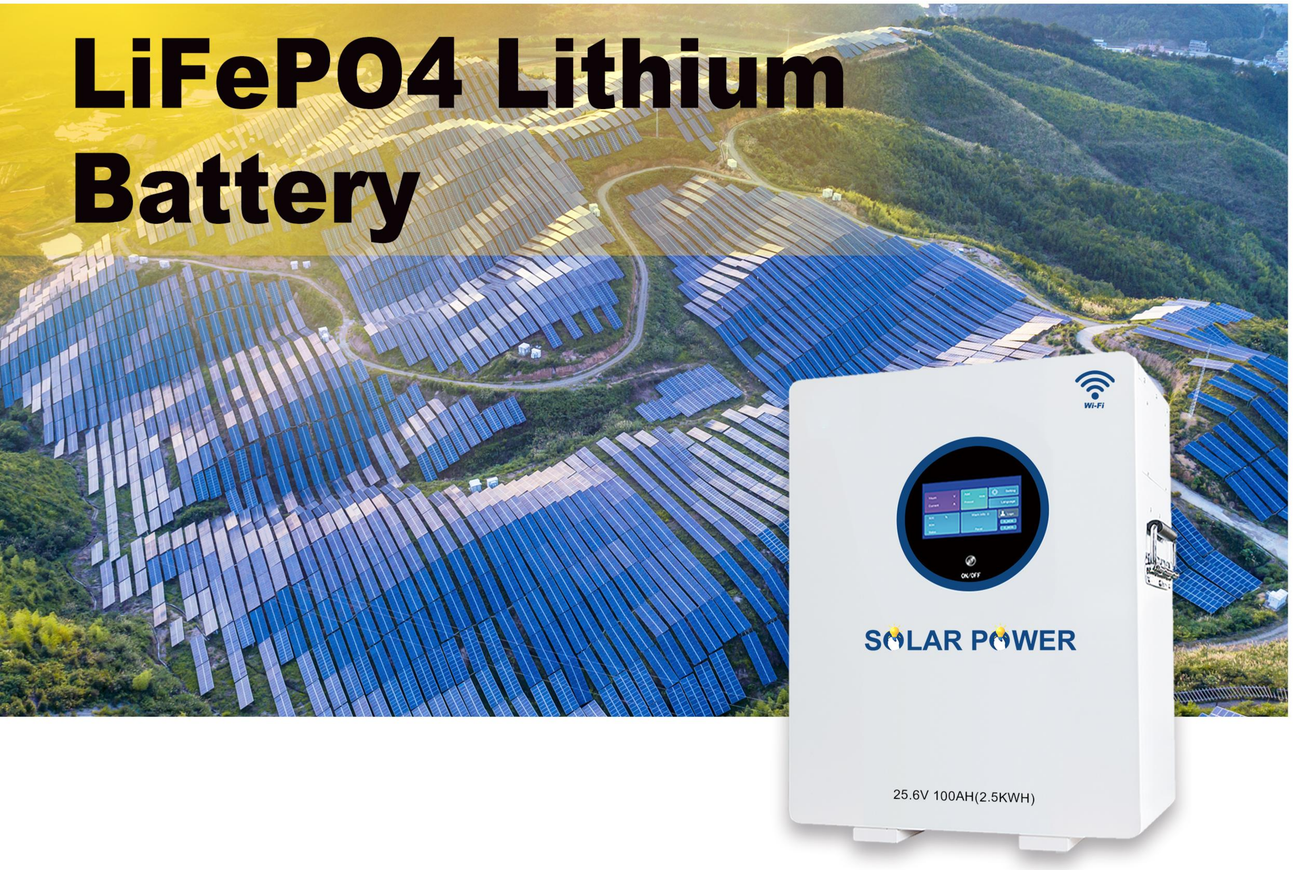

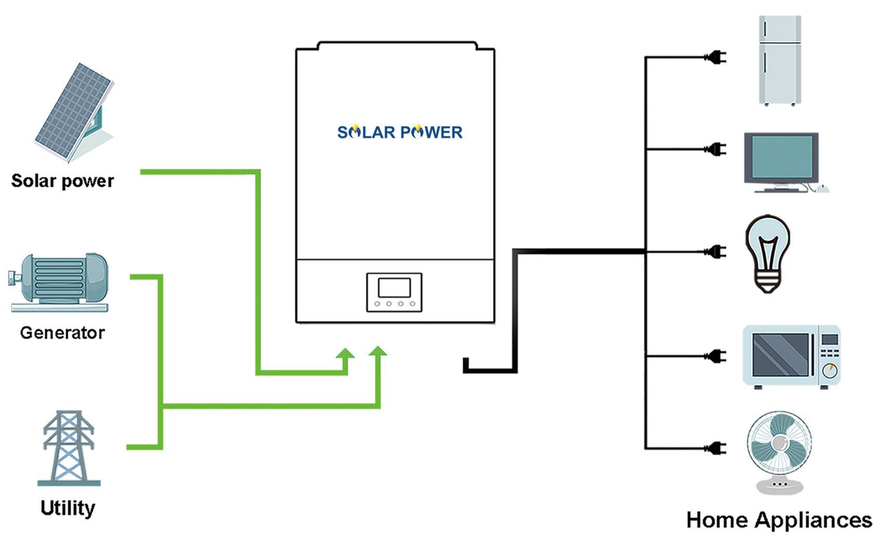

SOLAR POWER

Product specifications

Model	GSPW-25.6V-100ah LCD	
BMS	YES	
Battery Type	Lifepo4	
Nominal Voltage	25.6V	
Recommended Charge Voltage	29.2V	
Nominal Capacity	100ah	
Nominal Energy	2.56kwh	
Max Charge Current	100A	
Max Discharge Current	100A	
Standard Mothod Charge	50A	
Standard MothodDischarge	50A	
Max.charging voltage	29.2v	
Charging cut-off voltage	29.2V	
Discharging cut -off voltage	20v	
Life Cycling	8000 times	
Warranty	5 years	
Operating Temperature	Charge:	0-45℃
	Discharge:	-20~55℃
Storage Temperature	-5~35℃	
Case Material	SPPC	
Communication	CAN2.0/RS232/RS485	
Net Weight(kg)	33kg	
Gross Weight (kg)	43kg	
Cell Dimension(WHD)(mm)	160*116*50mm	
Battery Dimension(WHD)(mm)	450*360*200mm	
Packing Dimension(WHD)(mm)	500*410*300mm	

SOLAR POWER

LiFePO4 Lithium Battery

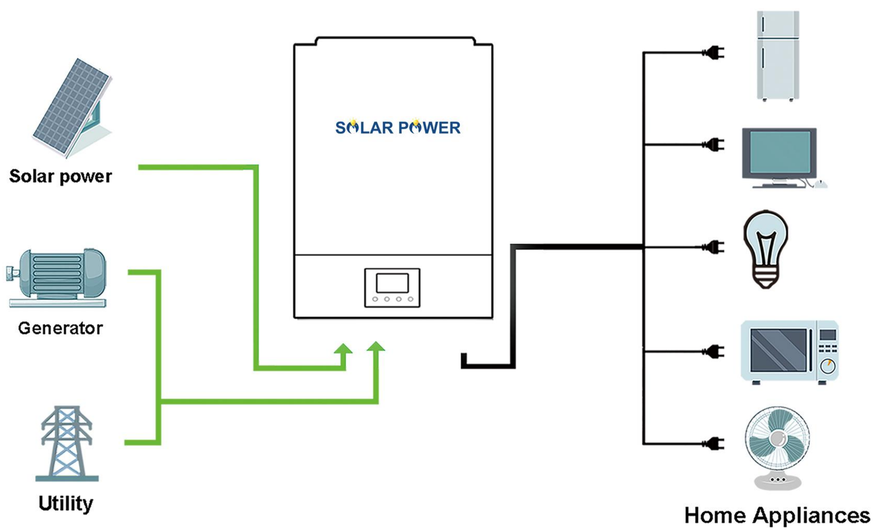

SOLAR POWER

Product specifications

Model	GSPW-51.2V-100ah LCD	
BMS	YES	
Battery Type	Lifepo4	
Nominal Voltage	51.2V	
Operating Voltage	40-58.4v	
Nominal Energy	5.12kwh	
Max Charge Current	50A	
Max Discharge Current	100A	
Max.Charging Voltage	60.8v	
Charging Cut-off Voltage	58.4V	
Discharging Cut -off Voltage	40V	
Nominal Capacity	100ah	
Life Cycling	8000 times	
Warranty	5 years	
Module Parallel	UP to 15pcs	
Operating Temperature	Charge:	0-45℃
	Discharge:	-20~55℃
Storage Temperature	-5~35℃	
Case Material	SPPC	
Communication	CAN2.0/RS232/RS485	
Net Weight(kg)	48kg	
Gross Weight (kg)	58kg	
Cell Dimension(WHD)(mm)	160*116*50mm	
Battery Dimension(WHD)(mm)	650*360*200mm	
Packing Dimension(WHD)(mm)	700*410*300mm	

SOLAR POWER

LiFePO4 Lithium Battery

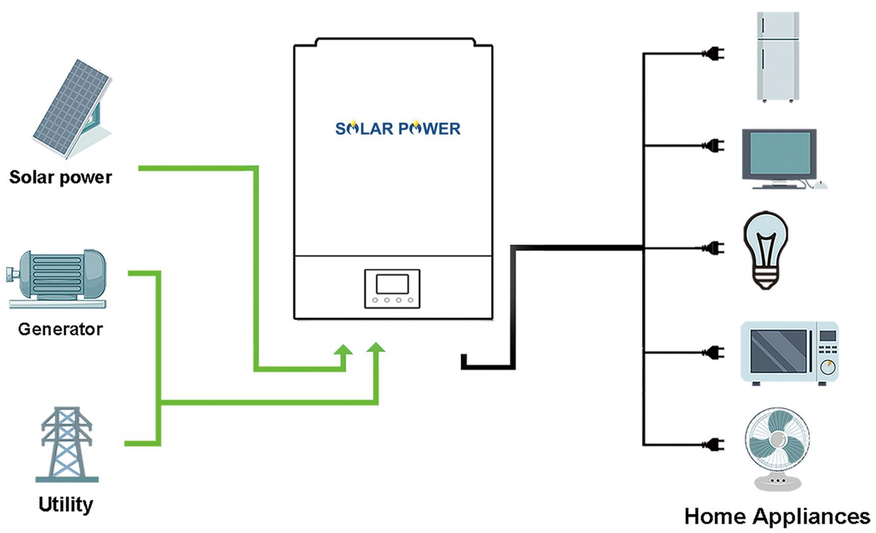

SOLAR POWER

Product specifications

Model	GSPW-51.2V-300ah LCD	
BMS	YES	
Battery Type	Lifepo4	
Nominal Voltage	51.2V	
Operating Voltage	40-58.4v	
Nominal Energy	15.36kwh	
Max Charge Current	140A	
Max Discharge Current	280A	
Max.Charging Voltage	60.8v	
Charging Cut-off Voltage	58.4V	
Discharging Cut -off Voltage	40V	
Nominal Capacity	300ah	
Life Cycling	8000 times	
Warranty	5 years	
Module Parallel	UP to 15pcs	
Operating Temperature	Charge:	0-45℃
	Discharge:	-20~55℃
Storage Temperature	-5~35℃	
Case Material	SPPC	
Communication	CAN2.0/RS232/RS485	
Net Weight(kg)	136kg	
Gross Weight (kg)	155kg	
Cell Dimension(WHD)(mm)	175*200*72mm	
Battery Dimension(WHD)(mm)	800*410*260mm	
Packing Dimension(WHD)(mm)	860*470*460mm	

SOLAR POWER

30kw Energy Storage System

ESS:

30KW

INVERTERS(IP65)1 PCS
3x16S 51.2V 280Ah LiFePO4 Battery Packs
540W Solar Panels 60 PCS

PRODUCT FEATURE

Parallel connection of multiple machines

Implemented by combining with outdoor control combiner cabinets
Modular expansion of distributed auxiliary energy systems to meet
Deployment requirements for large-scale application scenarios

Flexible and convenient

Modular design, supporting parallel connection of multiple machines,
Flexible deployment in factories
Various application scenarios such as parks

Intelligent operation and maintenance

Smart management, cloud connectivity supporting microgrids
Application of multi scenario modes in industry and commerce

Safe and reliable

Cell level monitoring, multiple electrical protections
PACK level fire protection design, P65 high protection

SOLAR POWER

Product specifications

PRODUGT MODEL	30kw-45kwh
PV input	
Maximum component power(W)	30000W
Maximum DC input voltage(V)	500V
MPPT voltage range(V)	90--450
Maximum MPPTcharging current (A)	27A*6
Number of MPPTroutes/strings	6
AC output parameter	
Nonimal power (W)	30000
Maximum apparent power(VA)	30000
Nonimal voltage(Vac)	400,3L/N/PE
Nonimal frequency (Hz)	50/60
Efficiency	
Maximum system efficlency	98%
Number of parallel machines	3
Battery parameters	
Dattery pack model	51.2-300AH
Number of paralels	3
Battery type	(LiFePO4)
Singe package capacity (Ah)	300
Total storage capacity(KWh)	45
cyclelife	8000
Battery port	
Operating voltage range(V)	40-58.4
Nonimal voltoge(V)	51
Maxuimum charging current(A)	140
Manimum discharge curent(A)	280
Battery communication mode	RS485 CAN
Basic parameters	
Operating temperature range	25℃+60℃(>45℃降额)-25℃+60℃(>45℃
Working alitude (m)	<4000
Noise index (dB)	<40
Cooling	Intelligent fan
ire fighting device	Thermally sensitive aerosol
Degree of protection	IP54
Relatve humidity range	5-85%
Human computer interaction	LCD
Cloud communication Meter	RS485(WFI OR GPS)
Size(mm)	2450*580*1800
Oweight(kg)	460
Instalation method	to ground
Certification	
Securty cerbficate	CE
Transportation	MSDS UN38.3

SOLAR POWER

60kw Energy Storage System

ESS:

60KW

INVERTERS(IP65)2 PCS
12x16S 51.2V 200Ah LiFePO4 Battery Packs
540W Solar Panels 110 PCS

PRODUCT FEATURE

Parallel connection of multiple machines

Implemented by combining with outdoor control combiner cabinets
Modular expansion of distributed auxiliary energy systems to meet
Deployment requirements for large-scale application scenarios

Flexible and convenient

Modular design, supporting parallel connection of multiple machines,
Flexible deployment in factories
Various application scenarios such as parks

Intelligent operation and maintenance

Smart management, cloud connectivity supporting microgrids
Application of multi scenario modes in industry and commerce

Safe and reliable

Cell level monitoring, multiple electrical protections
PACK level fire protection design, P65 high protection

SOLAR POWER

Product specifications

PRODUGT MODEL	60kw-120kwh
PV input	
Maximum component power(W)	80000W
Maximum DC input voltage(V)	1000V
MPPT voltage range(V)	350-900
Maximum MPPTcharging current (A)	26*6
Number of MPPTroutes/strings	6
AC output parameter	
Nonimal power (W)	60000
Maximum apparent power(VA)	60000
Nonimal voltage(Vac)	400,3L/N/PE
Nonimal frequency (Hz)	50/60
Efficiency	
Maximum system efficlency	98%
Number of parallel machines	2
Battery parameters	
Dattery pack model	614.4V-200AH
Number of paralels	2
Battery type	(LiFePO4)
Singe package capacity (Ah)	200
Total storage capacity(KWh)	120
cyclelife	8000
Battery port	
Operating voltage range(V)	340-467.2
Nonimal voltoge(V)	614
Maxuimum charging current(A)	140
Manimum discharge curent(A)	200
Battery communication mode	RS485 CAN
Basic parameters	
Operating temperature range	25℃+60℃(>45℃降额)-25℃+60℃(>45℃
Working alitude (m)	<4000
Noise index (dB)	<40
Cooling	Intelligent fan
ire fighting device	Thermally sensitive aerosol
Degree of protection	IP54
Relatve humidity range	5-85%
Human computer interaction	LCD
Cloud communication Meter	RS485(WFI OR GPS)
Size(mm)	2450*580*1800
Oweight(kg)	1560
Instalation method	to ground
Certification	
Securty cerbficate	CE
Transportation	MSDS UN38.3

SOLAR POWER

90kw Energy Storage System

ESS:

90KW

INVERTERS(IP65)3 PCS
12x16S 51.2V 280Ah LiFePO4 Battery Packs
540W Solar Panels 166 PCS

PRODUCT FEATURE

Parallel connection of multiple machines

Implemented by combining with outdoor control combiner cabinets
Modular expansion of distributed auxiliary energy systems to meet
Deployment requirements for large-scale application scenarios

Flexible and convenient

Modular design, supporting parallel connection of multiple machines,
Flexible deployment in factories
Various application scenarios such as parks

Intelligent operation and maintenance

Smart management, cloud connectivity supporting microgrids
Application of multi scenario modes in industry and commerce

Safe and reliable

Cell level monitoring, multiple electrical protections
PACK level fire protection design, P65 high protection

SOLAR POWER

Product specifications

PRODUGT MODEL	90kw-180kwh
PV input	
Maximum component power(W)	90000W
Maximum DC input voltage(V)	1000V
MPPT voltage range(V)	350-900
Maximum MPPTcharging current (A)	26*9
Number of MPPTroutes/strings	9
AC output parameter	
Nonimal power (W)	90000
Maximum apparent power(VA)	90000
Nonimal voltage(Vac)	400,3L/N/PE
Nonimal frequency (Hz)	50/60
Efficiency	
Maximum system efficlency	98%
Number of parallel machines	3
Battery parameters	
Dattery pack model	614.4V-300AH
Number of paralels	3
Battery type	(LiFePO4)
Singe package capacity (Ah)	300
Total storage capacity(KWh)	180
cyclelife	8000
Battery port	
Operating voltage range(V)	340-467.2
Nonimal voltoge(V)	614
Maxuimum charging current(A)	140
Manimum discharge curent(A)	280
Battery communication mode	RS485 CAN
Basic parameters	
Operating temperature range	25℃+60℃(>45℃降额)-25℃+60℃(>45℃
Working alitude (m)	<4000
Noise index (dB)	<40
Cooling	Intelligent fan
ire fighting device	Thermally sensitive aerosol
Degree of protection	IP54
Relatve humidity range	5-85%
Human computer interaction	LCD
Cloud communication Meter	RS485(WFI OR GPS)
Size(mm)	2450*580*1800
Oweight(kg)	1580
Instalation method	to ground
Certification	
Securty cerbficate	CE
Transportation	MSDS UN38.3

SOLAR POWER

120kw Energy Storage System

ESS:

120KW

INVERTERS(IP65)4 PCS
24x16S 51.2V 280Ah LiFePO4 Battery Packs
540W Solar Panels 222 PCS

PRODUCT FEATURE

Parallel connection of multiple machines

Implemented by combining with outdoor control combiner cabinets
Modular expansion of distributed auxiliary energy systems to meet
Deployment requirements for large-scale application scenarios

Flexible and convenient

Modular design, supporting parallel connection of multiple machines,
Flexible deployment in factories
Various application scenarios such as parks

Intelligent operation and maintenance

Smart management, cloud connectivity supporting microgrids
Application of multi scenario modes in industry and commerce

Safe and reliable

Cell level monitoring, multiple electrical protections
PACK level fire protection design, P65 high protection

SOLAR POWER

Product specifications

PRODUGT MODEL	120kw-360kwh
PV input	
Maximum component power(W)	120000W
Maximum DC input voltage(V)	1000V
MPPT voltage range(V)	350-900
Maximum MPPTcharging current (A)	26*12
Number of MPPTroutes/strings	12
AC output parameter	
Nonimal power (W)	120000
Maximum apparent power(VA)	120000
Nonimal voltage(Vac)	400,3L/N/PE
Nonimal frequency (Hz)	50/60
Efficiency	
Maximum system efficlency	98%
Number of parallel machines	4
Battery parameters	
Dattery pack model	614.4V-300AH
Number of paralels	4
Battery type	(LiFePO4)
Singe package capacity (Ah)	300
Total storage capacity(KWh)	360
cyclelife	8000
Battery port	
Operating voltage range(V)	340-467.2
Nonimal voltoge(V)	614
Maxuimum charging current(A)	280
Manimum discharge curent(A)	560
Battery communication mode	RS485 CAN
Basic parameters	
Operating temperature range	25℃+60℃(>45℃降额)-25℃+60℃(>45℃
Working alitude (m)	<4000
Noise index (dB)	<40
Cooling	Intelligent fan
ire fighting device	Thermally sensitive aerosol
Degree of protection	IP54
Relatve humidity range	5-85%
Human computer interaction	LCD
Cloud communication Meter	RS485(WFI OR GPS)
Size(mm)	2450*580*1800
Oweight(kg)	3500
Instalation method	to ground
Certification	
Securty cerbficate	CE
Transportation	MSDS UN38.3